School Of Mechanical Engineering KLE Technological University Hubballi – 580031

A REPORT ON

CAD MODEL OF TRICYCLE

COURSE: MINI PROJECT

COURSE CODE:15EMEW301

Group Members

1) Varun Teli	01FE22BME118 (233)
2) Irappa M Athani	01FE23BME440 (262)
3) Akshay P Kulkarni	01FE23BME476 (245)
4) Darshan K Lamdade	01FE23BME461 (234)
5) Mutturaj Kundagol	01FE23BME466 (229)

INTRODUCTION:-

CATIA V5 is a powerful and versatile computer-aided design (CAD) software used in various industries for product design and development, particularly in automotive, aerospace, and mechanical engineering sectors. Its advanced capabilities for 3D modeling, simulation, and product lifecycle management make it an ideal tool for designing complex mechanical systems and assemblies, such as a tricycle model. The process of designing and developing a tricycle in CATIA V5 involves several key stages, beginning with conceptualizing the design through sketches and creating a virtual 3D model. The first step in creating a tricycle model is to define the dimensions and geometry of the frame, wheels, and other major components such as the handlebars, pedals, and seat. CATIA V5's parametric design tools allow for precise control over these components, enabling designers to adjust dimensions and constraints to ensure proper fit and function. The software's powerful surface modeling and solid modeling capabilities facilitate the creation of complex shapes, such as the curvature of the frame, while maintaining design integrity and ease of assembly. Once the basic structure of the tricycle is created, assembly modeling tools in CATIA V5 can be used to position the parts and simulate their movement, ensuring that the wheels rotate smoothly and the pedals interact correctly with the rest of the mechanism. CATIA V5 also provides tools for performing kinematic and dynamic simulations to test the motion and behavior of the tricycle under different conditions, ensuring that the design is both efficient and safe for use. Additionally, the software allows for the integration of materials and manufacturing processes, helping to evaluate the structural integrity and cost-effectiveness of the design. After optimizing the model, designers can generate technical drawings and detailed documentation for manufacturing. Throughout the design process, CATIA V5's collaborative tools enable teams to work together efficiently, sharing data and modifications in real time. The software's comprehensive design and simulation environment makes it an essential tool for creating a tricycle model that is not only visually appealing and functional but also manufacturable and reliable in real-world applications.

OBJECTIVES:-

- To design and assemble a functional tricycle for children using CAD software.
- To explore and apply key design features like ergonomics and safety for children.
- To render realistic 3D models for visualization and evaluation.

PHYSICAL TRICYCLE:-

The physical tricycle is a compact and robust design tailored for children aged 2–6 years. Its components ensure stability and ease of use, providing a safe and enjoyable riding experience.

DISASSEMBLY OF TRICYCLE:-

COMPONENT DESCRIPTION:-

1. Frame

Description: The main structure of the tricycle that holds all components together.
Commands Used in CATIA V5:

- Sketcher: For creating the 2D outline of the frame.
- Pad (Extrude): To convert the sketch into a 3D model.
- Fillet: To round the edges for safety and aesthetics.
- Rid: For creating hollow sections to reduce weight.

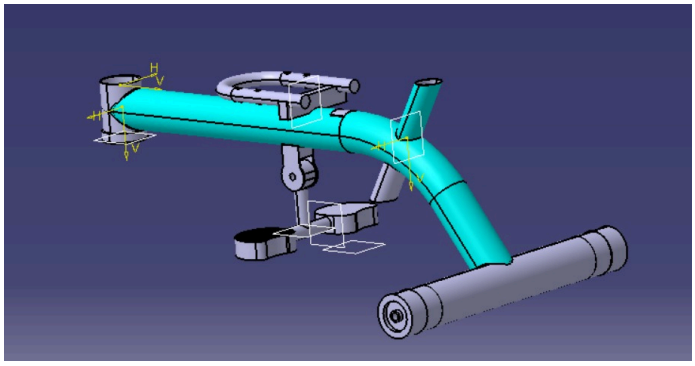

2. Wheels

Description: Three wheels, with larger wheels at the back and a smaller wheel in the front.
Commands Used in CATIA V5:

- Revolve: For creating the circular profile of the wheels.
- Circular Pattern: To replicate the wheel spokes.
- Fillet: For smooth transitions on the edges.
- Offset: For designing the tire surface.

3. Seat

Description: The place where the rider sits, designed for comfort and support.

Commands Used in CATIA V5:

- Sketcher: For the 2D outline.
- Pad: To extrude the seat design.
- Shell: To make the seat hollow and lightweight.
- Fillet: To enhance comfort and aesthetics.
- Seat Post

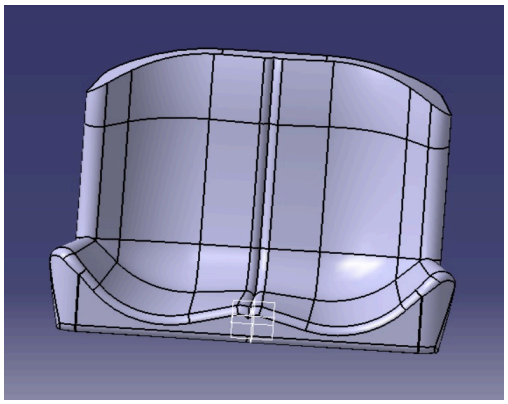

4. Pedals

Description: The components that the rider pushes to move the tricycle.

Commands Used in CATIA V5:

- Pad: For creating the pedal body.
- Fillet: To smooth sharp edges for safety.
- Pattern: For creating a textured surface for grip.

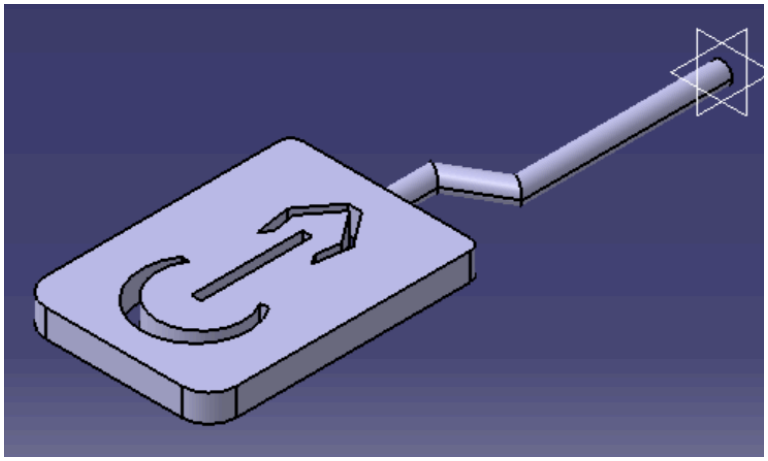

5. Parent-Control Handlebar for Tricycle

- Allows parents or guardians to steer or push the tricycle for young riders.
- Provides better control and safety for toddlers.

  Design in CATIA V5
- Sketcher: Create a 2D outline of the handlebar with ergonomic grips.
- Sweep: Model the curved sections for a comfortable height and design.
- Pad (Extrude): Build the straight sections of the handlebar.
- Fillet: Smooth edges for safety and aesthetics.
- Mirror: Ensure symmetry of both sides.

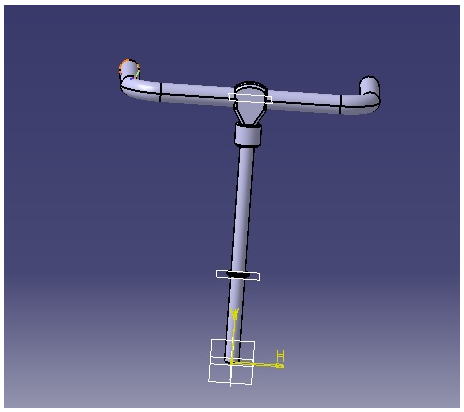

6. Y-sections to connect front wheel and handle Design in CATIA V5

- Sketcher: Draw the Y-shaped profile.
- Pad (Extrude): Create the 3D shape.
- Fillet: Smooth the edges for safety and aesthetics.
- Mirror: Ensure symmetry of both branches.
- Chamfer: Strengthen connection points

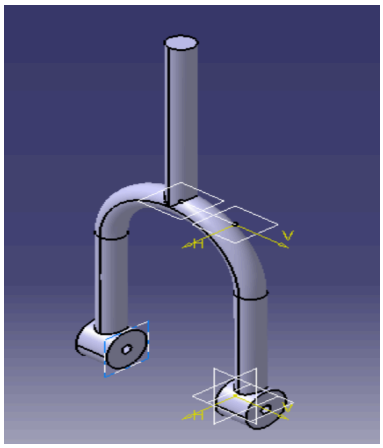

7. Hunger for front wheel Purpose

Protects the rider from mud, water, or debris thrown by the wheels. Enhances safety and cleanliness during use. Design in CATIA V5

- Sketcher: Draw the curved profile of the hugger to match the wheel's shape.
- Sweep: Create the hugger along the wheel's curvature.
- Pad (Extrude): Build the structure for flat surfaces.
- Fillet: Round edges for safety and smoothness.
- Shell: Hollow out the structure for weight reduction.

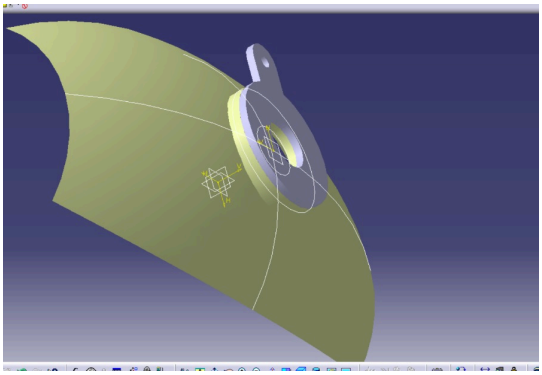

8. Basket or Storage Bin

Description: Attached for carrying toys or snacks.

Commands Used in CATIA V5:

- Sketcher: For the bin shape.
- Pad: To give it depth.
- Shell: To make it hollow.
- Pattern: For decorative holes or mesh design.

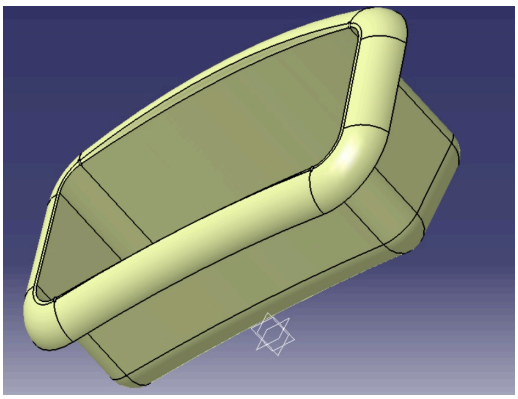

9. Handle bar

Description: Used for steering the tricycle.

Commands Used in CATIA V5:

- Sweep: To create curved handlebars.
- Pad: For straight sections.
- Mirror: To ensure symmetry in the design.

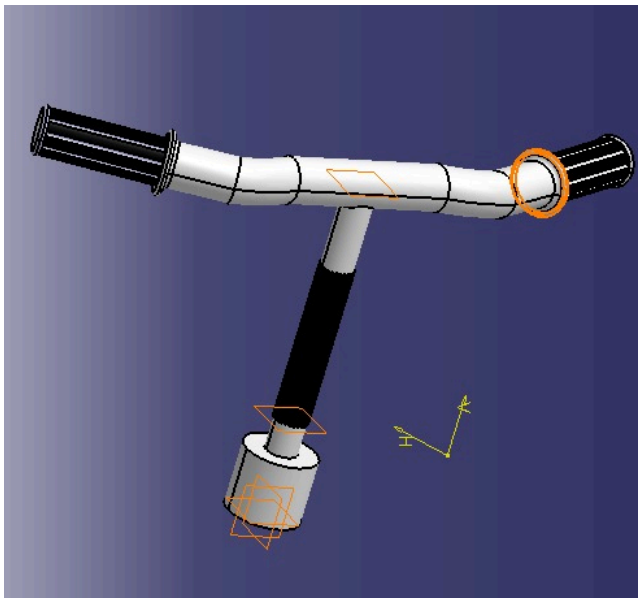

10. Pedals

Description: The components that the rider pushes to move the tricycle.

Commands Used in CATIA V5:

- Pad: For creating the pedal body.
- Fillet: To smooth sharp edges for safety.
- Pattern: For creating a textured surface for grip.

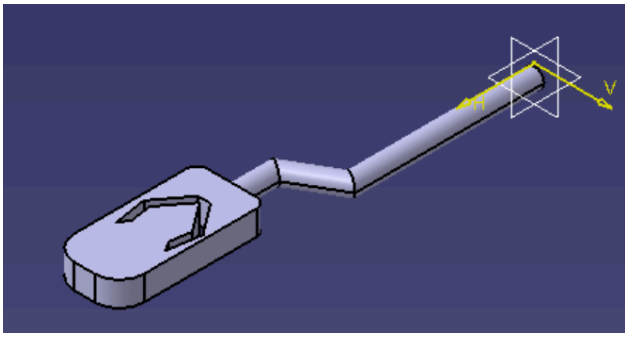

11. Seat Post

Description: Connects the seat to the frame and may be adjustable.

Commands Used in CATIA V5:

- Pad: For creating the post structure.
- Chamfer: For easy assembly.

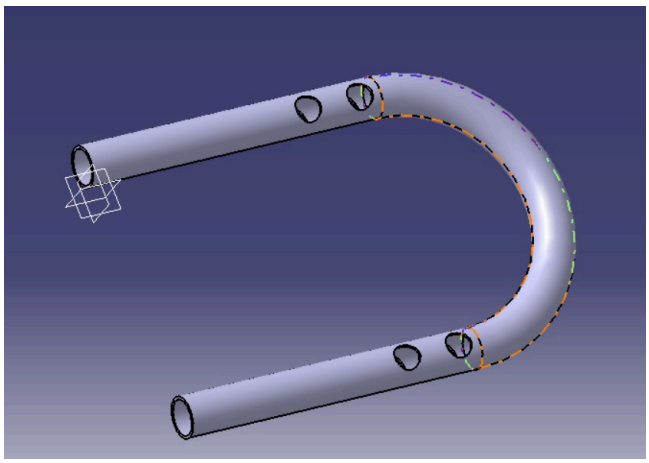

12. Basket or Storage Bin

Description: Attached for carrying toys or snacks.

Commands Used in CATIA V5:

- Sketcher: For the bin shape.
- Pad: To give it depth.
- Shell: To make it hollow.
- Pattern: For decorative holes or mesh design.
- Additional Features and Commands Used

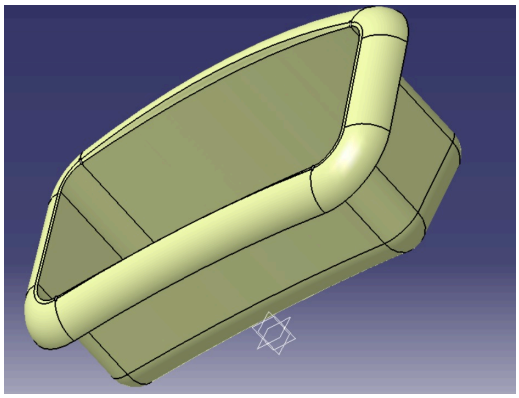

13. Push Handle

Description: Handle for parents to push the tricycle.

Commands Used in CATIA V5:

- Sweep: For the curved handle shape.
- Fillet: To smooth the grip.

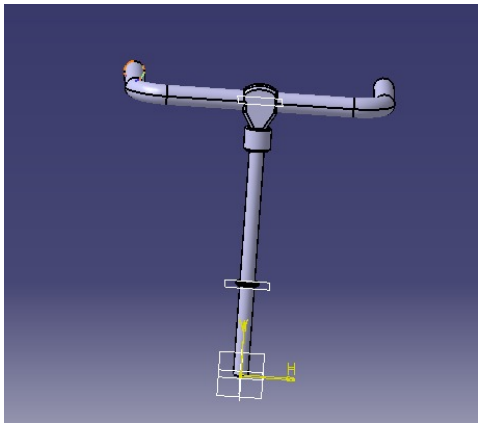

14. Footrest

Description: Provides a resting place for feet when not pedaling.

Commands Used in CATIA V5:

- Pad: For the platform.
- Fillet: To round the edges.

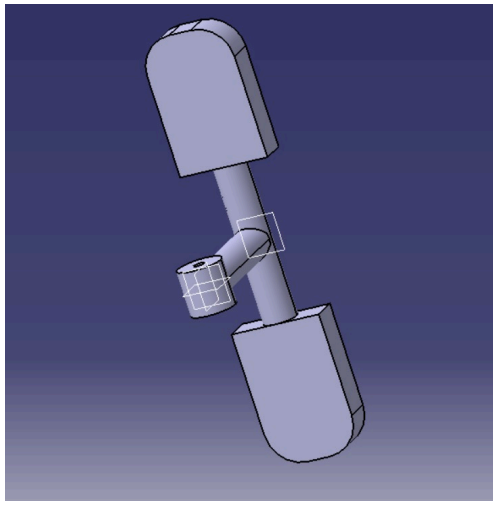

15. Non-Slip Pedals

Description: Textured pedals to prevent slipping.

Commands Used in CATIA V5:

- Pattern: For creating anti-slip textures.
- Fillet: For smooth transitions.

16. Bucket for Tricycle

Purpose

Provides storage space for toys, snacks, or other small items.

Enhances the tricycle's functionality and appeal for children.

Design in CATIA V5

- Sketcher: Draw the base and side profiles of the bucket.
- Pad (Extrude): Create the 3D structure of the bucket.
- Shell: Hollow out the interior for storage space.
- Fillet: Smooth all edges for safety and a polished look.
- Pattern: Add decorative holes or ridges if needed.

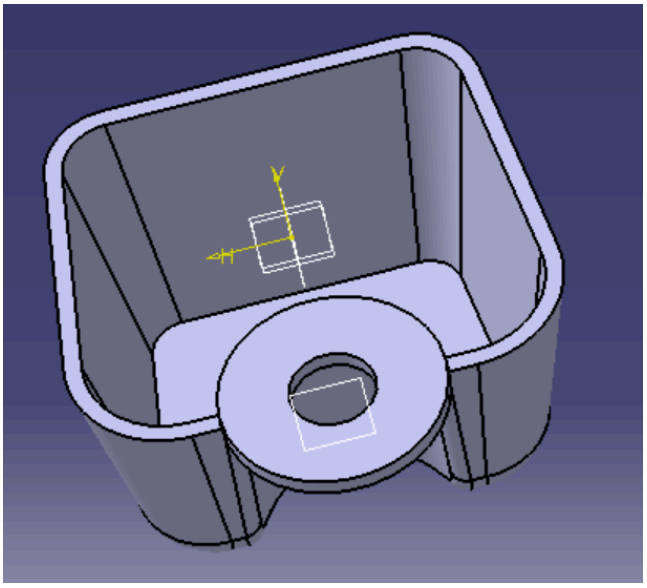

Steps for Assembling Parts in CAD:-

1. Open the CAD Software:

Launch your preferred CAD software and open the existing or newly created parts that you want to assemble.

2. Create a New Assembly:

In most CAD software, start a new assembly file. This file will serve as the workspace for combining individual parts.

3. Insert Components:

Insert each individual part into the assembly. Typically, this involves importing the CAD files of the components into the assembly workspace.

4. Align and Position:

Use alignment tools to position and orient each component correctly within the assembly. This ensures that parts fit together accurately.

5. Add Constraints:

Apply constraints or mates t o restrict the movement of parts relative to each other. Common constraints include coincident (parts share a common point), concentric (parts share a common axis), and parallel constraints.

6. Define Joints:

If applicable, define joints or connections between moving parts. This step is crucial for parts that are intended to move relative to each other, such as the wheel sub assembly rotating around an axle.

7. Check for Interference:

Use interference checking tools to identify any collisions or overlaps between parts. Resolve any issues by adjusting component positions or dimensions.

8. Test Movement and Functionality:

Simulate the movement of parts within the assembly to ensure that they function as intended. This is particularly important for dynamic components such as wheels, joints, or moving arms.

2D DRAWING: -

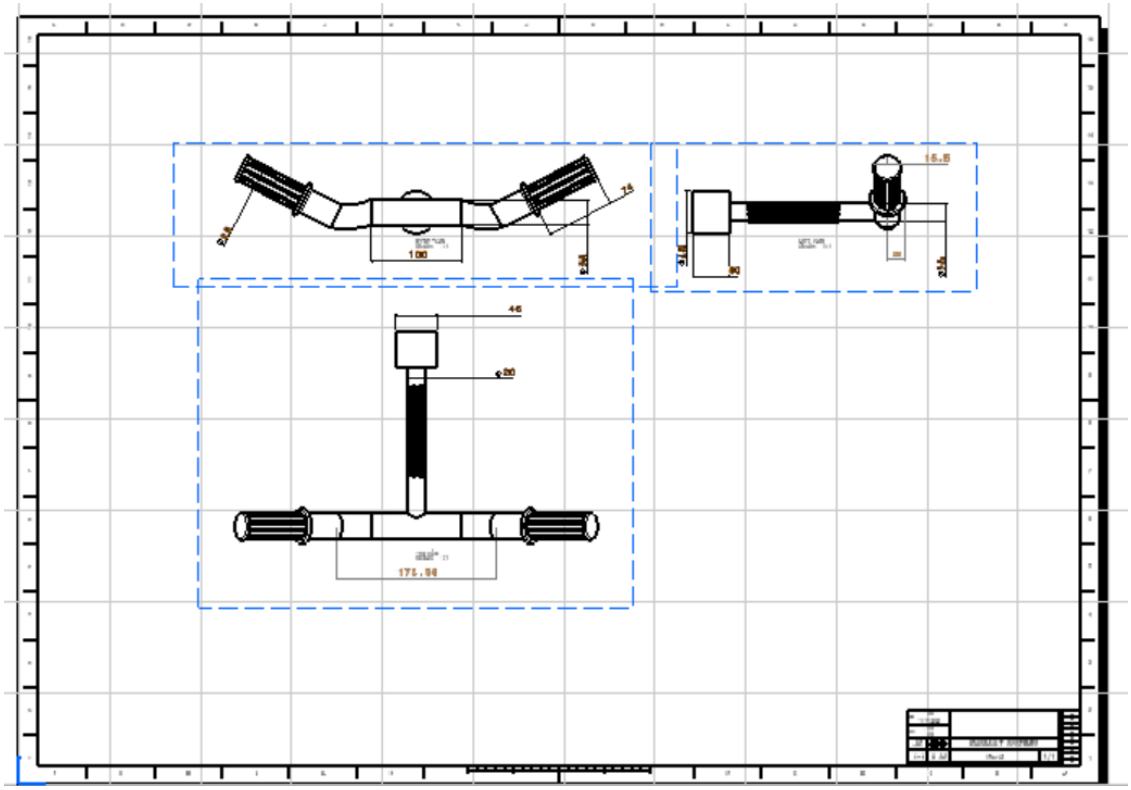

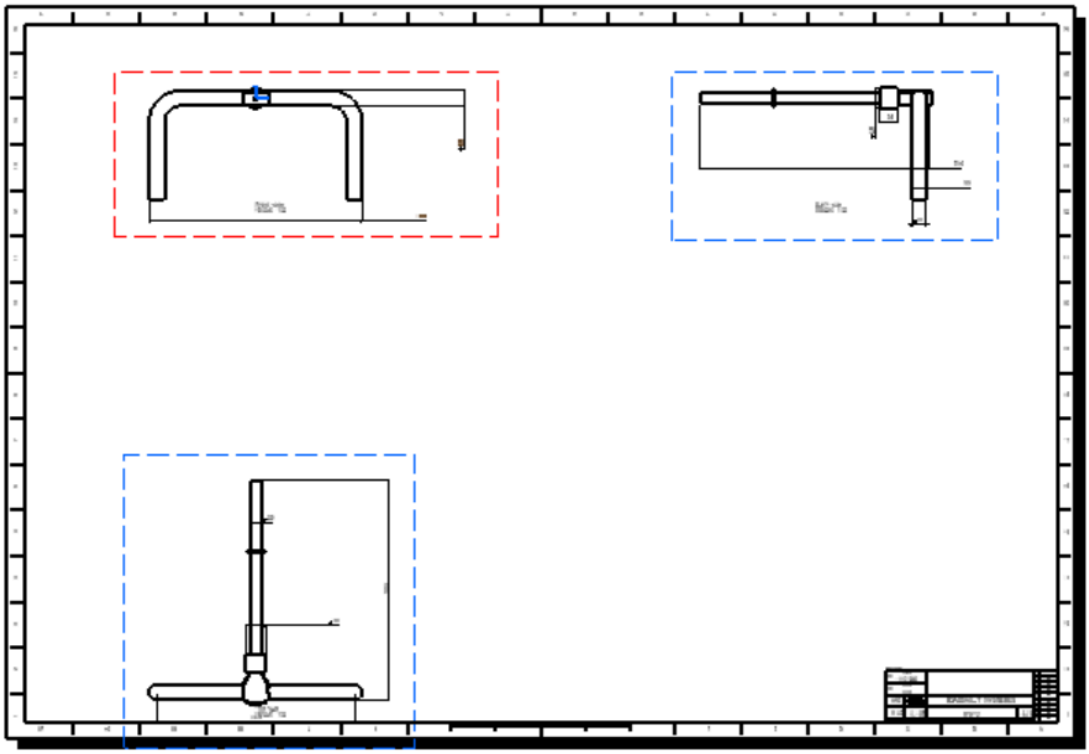

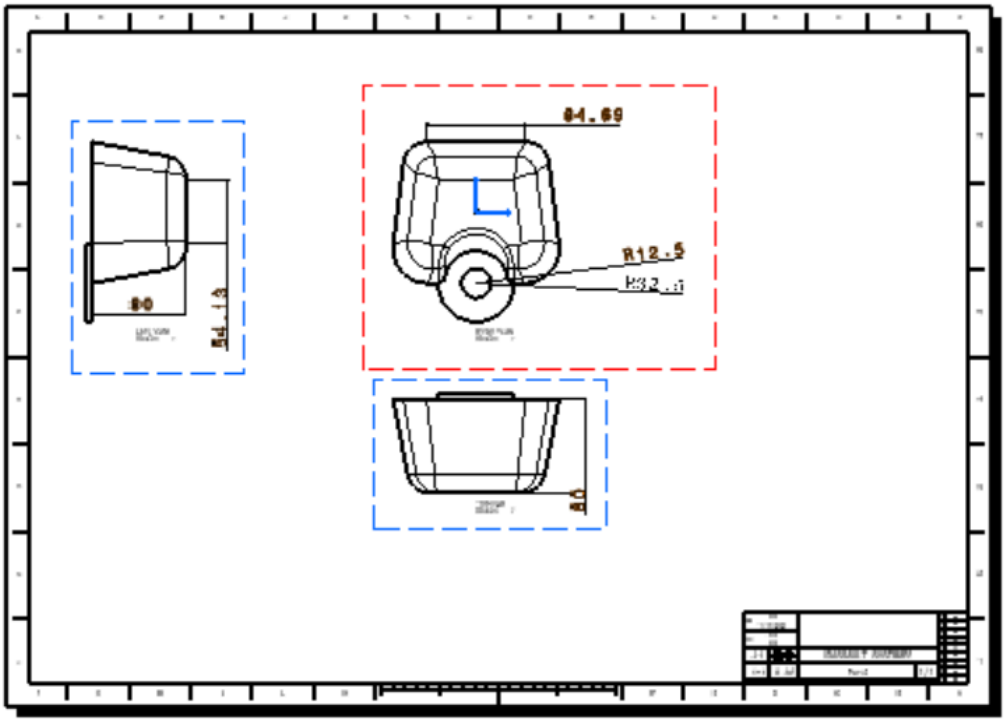
84.69
R12.5
80

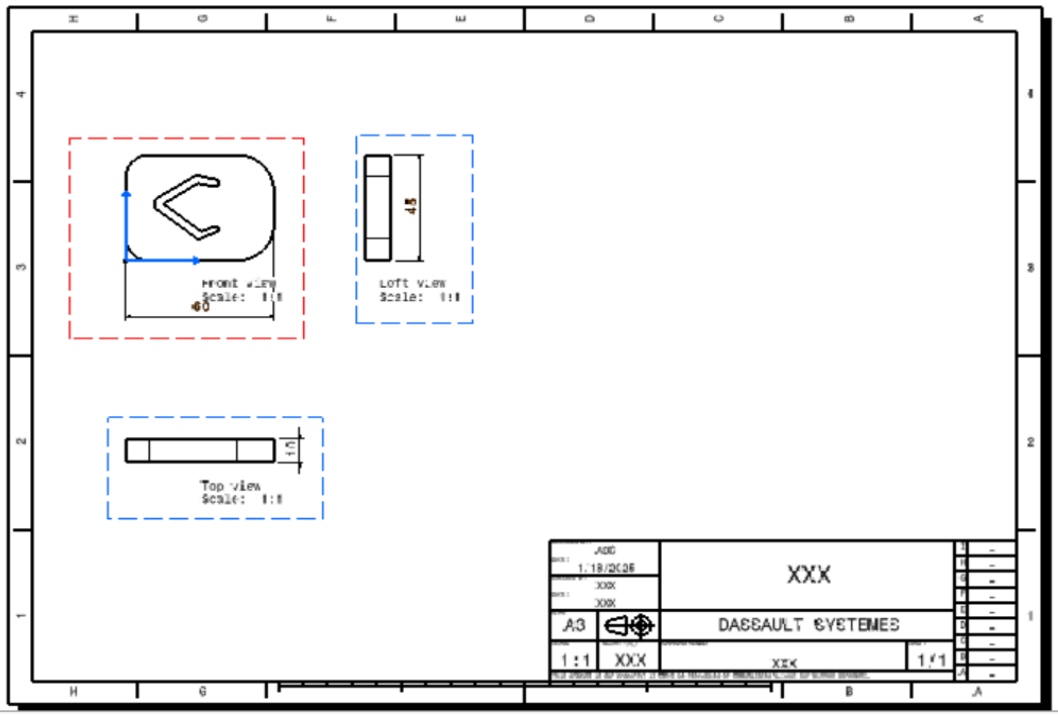
Front view
Scale: 1:1
40
Left view
Scale: 1:1
45
Top view
Scale: 1:1
10
XXX
DASSAULT SYSTEMES
A3
1:1
XXX
1/1

3D MODE

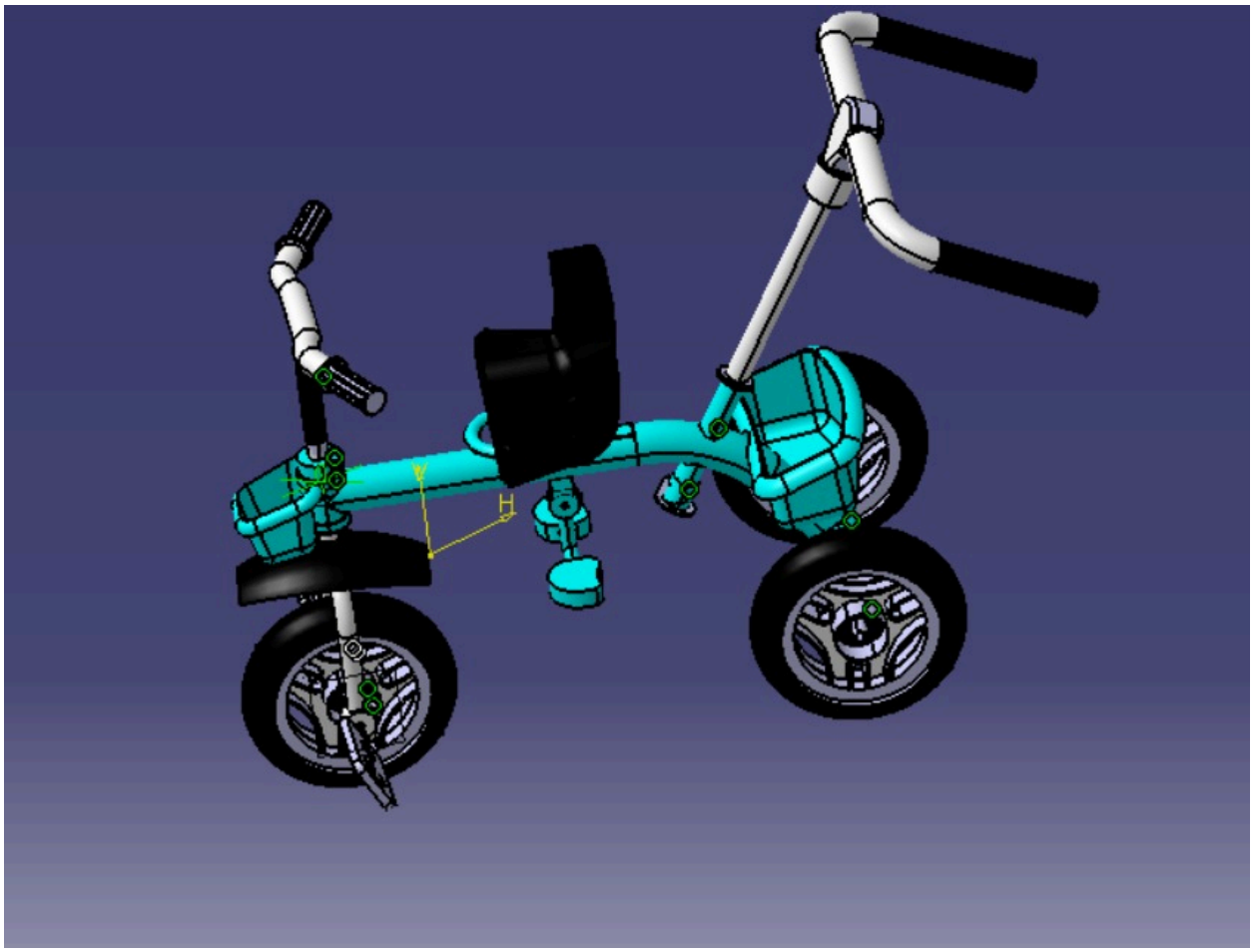

Conclusion

The project on designing and developing a tricycle for children successfully demonstrates the application of engineering principles, ergonomics, and CAD technology. The process involved:

Designing key components such as the frame, wheels, handlebar, bucket, and parent-control handle.
Utilizing CATIA V5 tools like Sketcher, Pad, Sweep, and Fillet to create precise and functional 3D models.
Ensuring safety, durability, and usability through thoughtful design considerations.
This project highlights the synergy between creativity and technical skills to create a product that is both practical and enjoyable for children, with features that cater to their needs while ensuring parental control and safety.

The final design serves as a foundation for future enhancements such as customizable features, eco-friendly materials, and advanced safety options.